FORGED BRASS CHECK VALVES 1/2" TO 1"

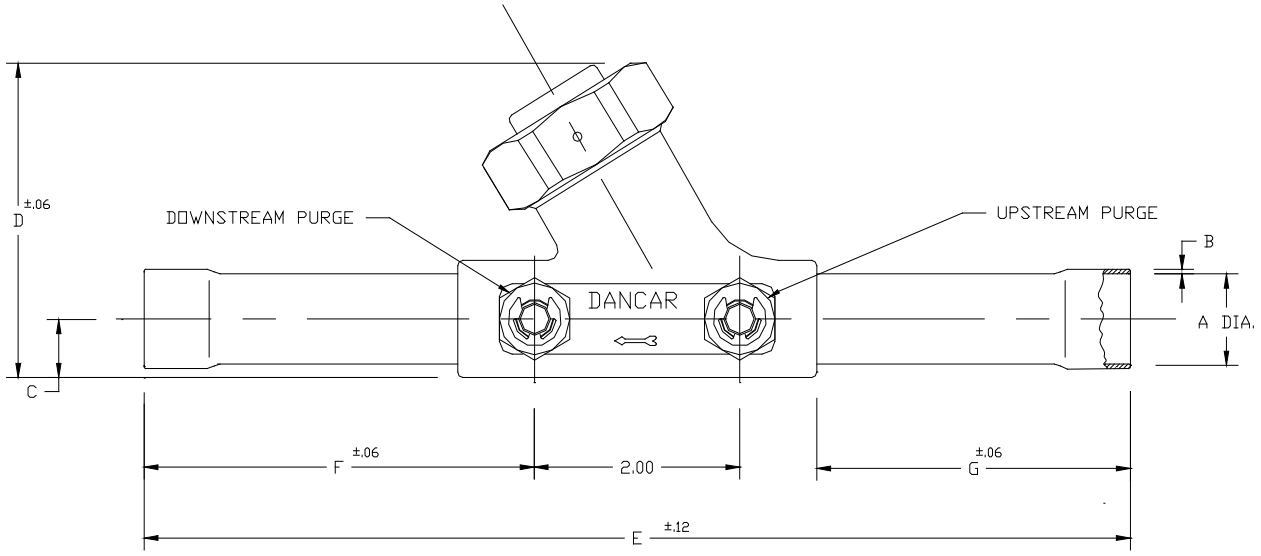

FORGED BRASS CHECK VALVES WITH EXPANDED COPPER TUBE EXTENSIONS

PART NUMBER	A ODS	B	C	D	E	F	G	BODY WIDTH *	APPROX. WEIGHT	Cv
C0625	.628	.040	.400	2.875	9.600	3.800	3.050	1.19	1.80	3.60(E)
C0875	.879	.045	.562	3.300	11.570	4.780	3.910	1.50	2.50	6.70(E)
C1125	1.130	.050	.687	4.130	15.700	6.850	5.350	1.92	4.25	11.00(E)

NOTE: (E) = ESTIMATED VALUES

FORGED BRASS CHECK VALVES WITH 316L STAINLESS TUBE EXTENSIONS - NOT EXPANDED

PART NUMBER	A ODS	B	C	D	E	F	G	BODY WIDTH *	APPROX. WEIGHT	Cv
C0500-049	.500	.049	.406	2.875	9.500	3.750	3.000	1.200	2.30	3.50(E)
C0500-065	.500	.065	.406	2.875	9.500	3.750	3.000	1.200	2.35	3.50(E)
C0750-065	.750	.065	.562	3.330	9.750	3.875	3.000	1.500	3.00	6.50(E)
C0750-095	.750	.095	.562	3.330	9.750	3.875	3.000	1.500	3.05	6.50(E)
C1000-065	1.000	.065	.687	4.130	11.000	4.500	3.000	2.000	4.75	11.00(E)
C1000-095	1.000	.095	.687	4.130	11.000	4.500	3.000	2.000	4.80	11.00(E)

*** DOES NOT INCLUDE PURGE ACCESS PORT DIMENSION.**

NOTE: THE VALVE INTERNALS ARE NOT TO BE REMOVED PRIOR TO INERT GAS PURGE INSTALLATION. IT IS CUSTOMARY TO PURGE CHECK VALVES THRU THE UPSTREAM PURGE CONNECTION DURING INSTALLATION.

VALVE WORKING PRESSURE IS 250 PSI MAXIMUM.

ALL PRODUCTS ARE TESTED TO 1 X 10^{-7}. LOWER RATINGS ARE AVAILABLE AT ADDITIONAL COST.

DANCAR CORPORATION - 145 North Benson Road, Middlebury, CT 06762
Tel. (203) 598 0205 - Fax (203) 598 0211 *dancar@dancar.com*